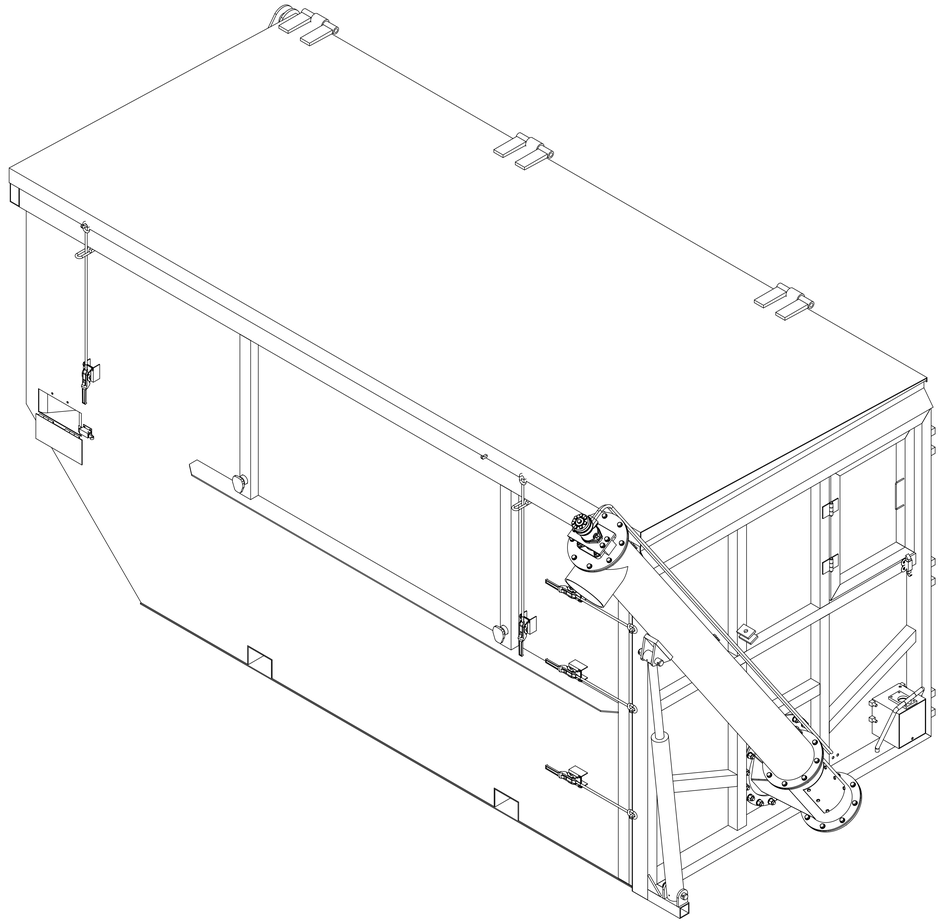

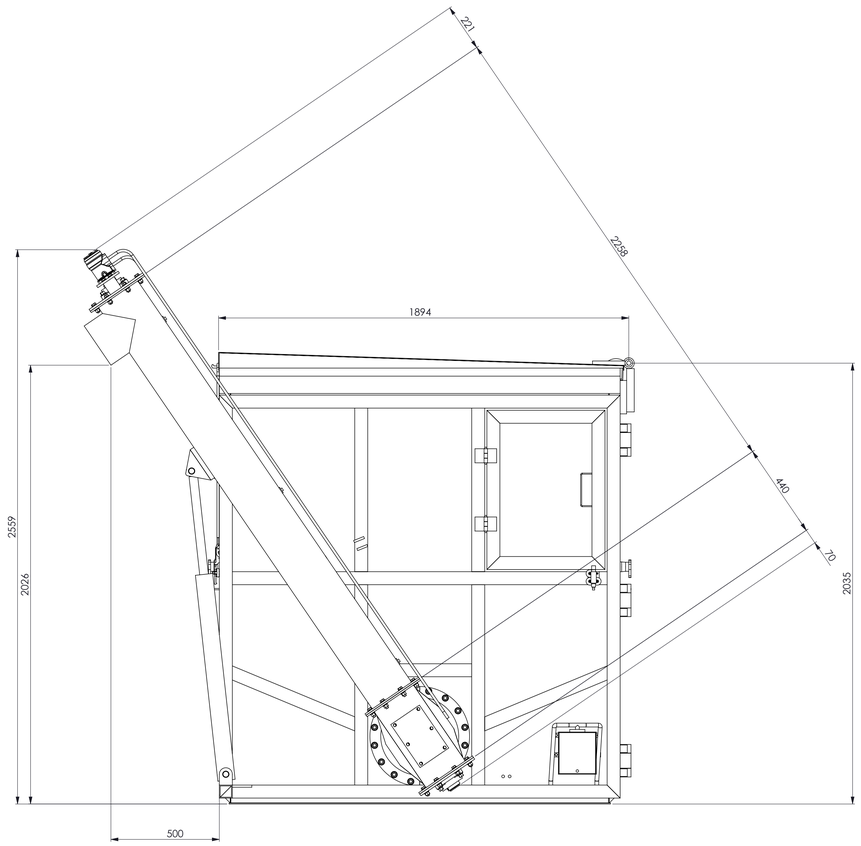

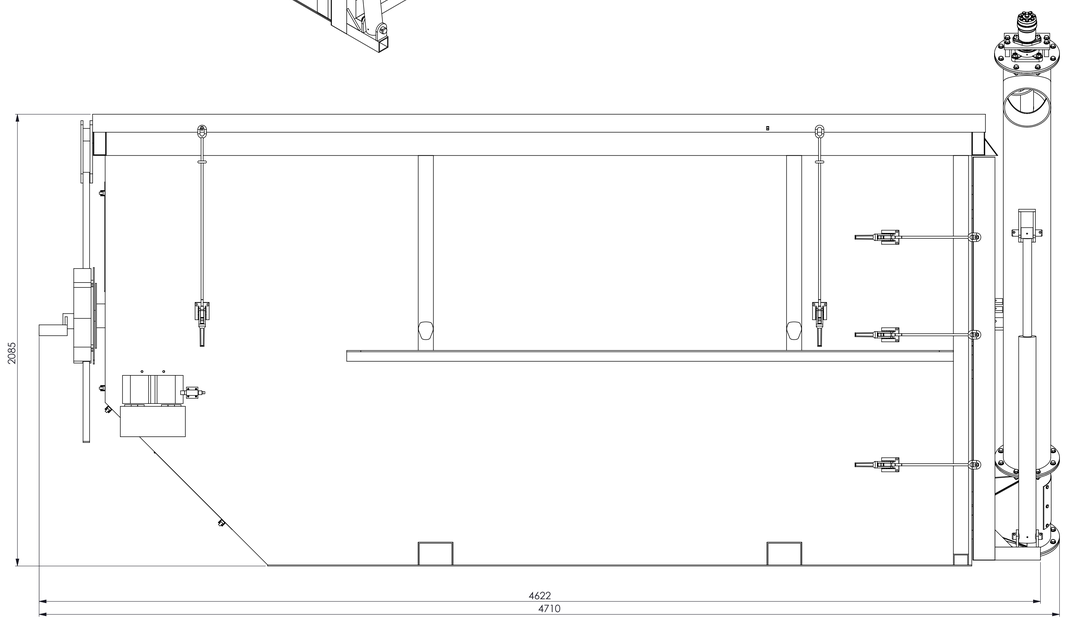

Rev.	Name	Date	Name	Name	Date	Status	Kind of Revision
00	Berger	13.01.21				fin.	first issue
	Prepared/Changed		Checked	Approved			

ECOBOX 10

The copying, distribution and utilization of this document as well as the communication of its contents to others without expressed authorization by floradry is prohibited. Offenders will be held liable for the payment of damages. All rights reserved in the event of the grant of a patent, utility model or ornamental design registration.

Scale: 1:30

Original Size: A0

floradry GmbH
Stahlgruberring 7a
81829 Muenchen

floradry

Originated from: ----

Replacement for: ----

Replaced by: ----

Assecory documents: ----

ECOBOX 10

Streugutcontainer 10 m³

Job name	Job No.	Document No.	Rev.
Sales	SC.10	00.00	00

SolidWorks: SC.10.00.00 - for sales 210113